TRIAC®
CONTROLS
A Division of A-T Controls, Inc.

# Pneumatic Rotary Actuators and Accessories

II 2 GD c IIC

ATEX CE 0425

## FEATURES

TRIAC® pneumatic actuators are designed and manufactured to provide the highest cycle-life on the market. We can accessorize them to accomplish virtually any control requirement. They are available with various mounting dimension configurations and span eleven models for appropriate torque compatibility. Our extensive inventory and engineering capabilities allow us to respond to your needs with flexibility. We pride ourselves on exceeding customer expectations. Contact us for application assistance.

- Double acting and spring return
- Dual travel stops
- Torques to 36,000 In-lbs
- DA and SR common end caps
- ISO 5211 / DIN 3337 mounting pad dimensions
- Wide base for direct mount to many butterfly valves
- Substantial pinion bearings mean high cycle life
- Corrosion resistant hard anodized finish
- Each unit serialized
- VDI/VDE 3845 accessory mounting configuration
- Custom accessory mounting
- NAMUR solenoid mounting pad

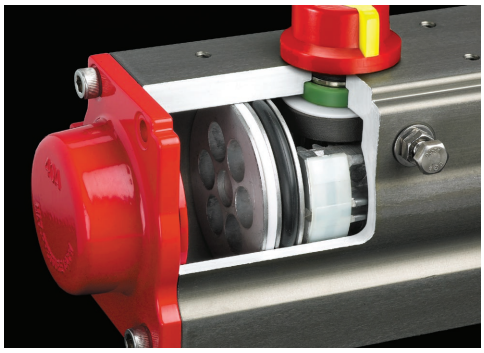

See accessory page for details

# GENERAL TECHNICAL DATA

TRIAC

- Standard working temperature -5°F to 175°F
- Low temperature and high temperature option
- Maximum working pressure 150 psig
- Operating media - clean, dry air, non-corrosive gas or light hydraulic oil
- Air supply 40 psi - 150 psi
- Rotation 100°
- Dual travel stops standard
- Mounting dimensions
  - Accessories to NAMUR - VDI/VDE 3845
  - Valve mounting to ISO 5211 (TR10 - 2R3500)
  - Custom configurations available in quantity
- Permanently lubricated units

## Operation

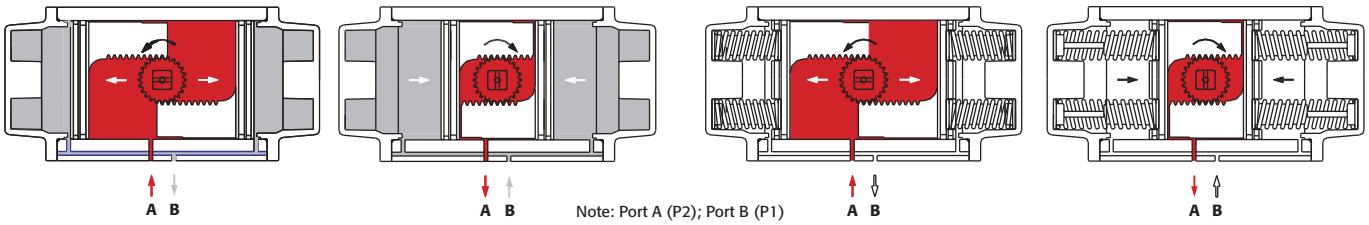


Note: Port A (P2); Port B (P1)

### Double Acting Operation

**CCW**

Air is supplied to Port A forcing the pistons away from each other (toward ends), rotating drive pinion counterclockwise and exhausting air out of Port B.

**CW**

Air is supplied to Port B forcing the pistons toward each other (toward center), rotating drive pinion clockwise and exhausting air out of Port A.

### Spring Return Operation

**CCW**

Air is supplied to Port A forcing the pistons away from each other (toward ends), rotating drive pinion counterclockwise, compressing springs and exhausting air out of Port B.

**FAIL CW**

Air failure (loss of pressure) allows compressed springs to force pistons toward each other (toward center), rotating drive pinion clockwise and exhausting air out of Port A.

*(Unit is capable of failure in counterclockwise direction by reversing pistons inside of housing.)

## Torque Curves

### TR10-2R1750 Rack & Pinion Design

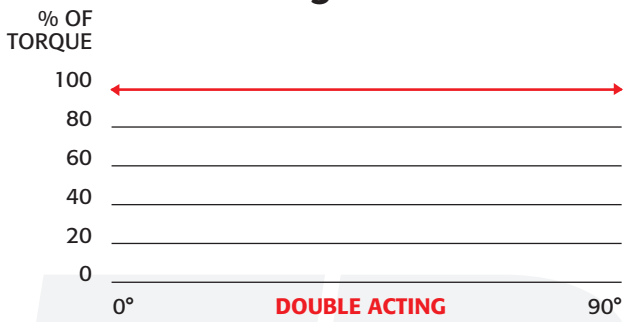


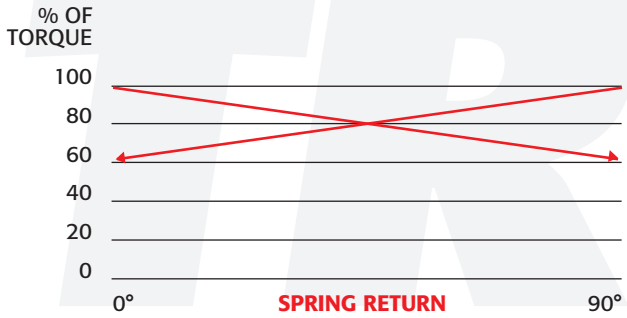


### 2R2500-2R3500 Scotch Yoke Design

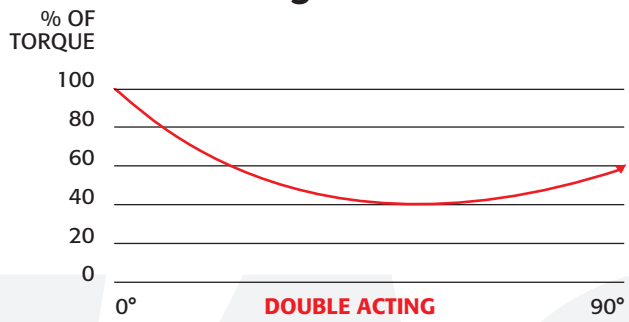


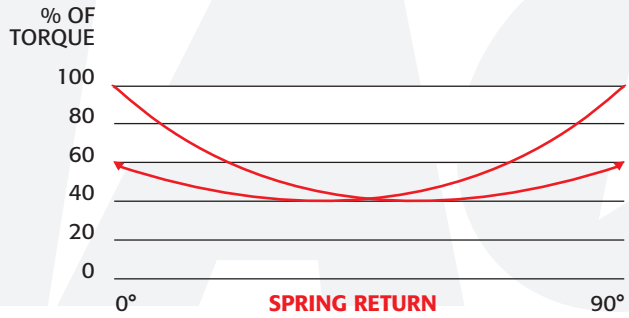

## SPRING RETURN TORQUE (In-lbs)

| | | SPRING TORQUE | | AIR SUPPLY 40 psi | | 60 psi | | 80 psi | | 100 psi | |
|---|---|---|---|---|---|---|---|---|---|---|---|
| MODEL | SPRINGS/ SIDE (5 Standard) | END | BREAK | END | BREAK | END | BREAK | END | BREAK | END | BREAK |
| TR20SR | 2 | 19 | 31 | 36 | 48 | 77 | 89 | | | | |
| | 3 | 29 | 49 | 20 | 40 | 60 | 80 | 94 | 115 | 139 | 160 |
| | 4 | 39 | 67 | | | 42 | 70 | 78 | 106 | 113 | 145 |
| | 5 | 49 | 84 | | | 25 | 60 | 61 | 96 | 105 | 135 |
| | 6 | 59 | 101 | | | | | 43 | 85 | 88 | 121 |
| 2R40SR | 2 | 33 | 59 | 63 | 89 | 125 | 151 | | | | |
| | 3 | 49 | 87 | 27 | 54 | 98 | 135 | 159 | 196 | | |
| | 4 | 65 | 114 | | | 70 | 119 | 131 | 180 | 194 | 243 |
| | 5 | 82 | 142 | | | 43 | 103 | 103 | 164 | 165 | 226 |
| | 6 | 98 | 170 | | | | | 75 | 147 | 137 | 209 |
| 2R80SR | 2 | 86 | 160 | 185 | 259 | 358 | 432 | | | | |
| | 3 | 128 | 245 | 101 | 218 | 273 | 390 | 447 | 564 | | |
| | 4 | 170 | 330 | | | 188 | 348 | 362 | 522 | 536 | 696 |
| | 5 | 215 | 410 | | | 109 | 304 | 282 | 477 | 455 | 651 |
| | 6 | 260 | 490 | | | | | 202 | 432 | 375 | 605 |
| 2R130SR | 2 | 120 | 226 | 233 | 339 | 473 | 579 | | | | |
| | 3 | 185 | 343 | 117 | 275 | 356 | 514 | 586 | 744 | | |
| | 4 | 250 | 460 | | | 239 | 449 | 469 | 679 | 720 | 930 |
| | 5 | 315 | 573 | | | 127 | 385 | 357 | 614 | 607 | 864 |
| | 6 | 380 | 685 | | | | | 244 | 549 | 494 | 799 |
| 2R200SR | 2 | 168 | 310 | 339 | 481 | 669 | 811 | | | | |
| | 3 | 252 | 460 | 190 | 398 | 519 | 727 | 849 | 1,057 | | |
| | 4 | 336 | 610 | | | 369 | 643 | 699 | 973 | 1,030 | 1,304 |
| | 5 | 420 | 760 | | | 220 | 560 | 549 | 889 | 879 | 1,219 |
| | 6 | 504 | 910 | | | | | 399 | 805 | 729 | 1,135 |
| 2R300SR | 2 | 350 | 644 | 745 | 1,039 | 1,445 | 1,739 | | | | |
| | 3 | 525 | 962 | 428 | 865 | 1,127 | 1,564 | 1,827 | 2,264 | | |
| | 4 | 700 | 1,280 | | | 809 | 1,389 | 1,509 | 2,089 | 2,200 | 2,780 |
| | 5 | 880 | 1,605 | | | 485 | 1,210 | 1,184 | 1,909 | 1,874 | 2,599 |
| | 6 | 1,060 | 1,930 | | | | | 859 | 1,729 | 1,549 | 2,419 |
| 2R500SR | 2 | 530 | 920 | 1,109 | 1,499 | 2,129 | 2,519 | | | | |
| | 3 | 795 | 1,380 | 650 | 1,235 | 1,669 | 2,254 | 2,679 | 3,264 | | |
| | 4 | 1,060 | 1,840 | | | 1,209 | 1,989 | 2,219 | 2,999 | 3,231 | 4,010 |
| | 5 | 1,325 | 2,300 | | | 750 | 1,725 | 1,759 | 2,734 | 2,769 | 3,744 |
| | 6 | 1,590 | 2,760 | | | | | 1,299 | 2,469 | 2,309 | 3,479 |
| 2R850SR | 2 | 740 | 1,230 | 1,499 | 1,989 | 2,929 | 3,419 | | | | |
| | 3 | 1,100 | 1,835 | 1,095 | 1,830 | 2,324 | 3,059 | 3,644 | 4,379 | | |
| | 4 | 1,460 | 2,440 | | | 1,719 | 2,699 | 3,039 | 4,019 | 4,320 | 4,300 |
| | 5 | 1,815 | 3,050 | | | 1,110 | 2,345 | 2,429 | 3,664 | 3,709 | 4,944 |
| | 6 | 2,170 | 3,660 | | | | | 1,819 | 3,309 | 3,099 | 4,589 |
| 2R1200SR | 2 | 1,050 | 1,820 | 2,029 | 2,799 | 4,189 | 4,959 | | | | |
| | 3 | 1,575 | 2,730 | 1,120 | 2,275 | 3,279 | 4,434 | 5,169 | 6,324 | | |
| | 4 | 2,100 | 3,640 | | | 2,369 | 3,909 | 4,259 | 5,799 | 6,140 | 7,680 |
| | 5 | 2,625 | 4,550 | | | 1,460 | 3,385 | 3,349 | 5,274 | 5,169 | 7,094 |
| | 6 | 3,150 | 5,460 | | | | | 2,439 | 4,749 | 4,259 | 6,569 |
| 2R1750SR | 2 | 1,390 | 2,430 | 3,049 | 4,089 | 6,124 | 7,164 | | | | |
| | 3 | 2,085 | 3,645 | 1,835 | 3,395 | 4,909 | 6,469 | 7,664 | 9,224 | | |
| | 4 | 2,780 | 4,860 | | | 3,694 | 5,774 | 6,449 | 8,529 | 9,100 | 11,180 |
| | 5 | 3,475 | 6,075 | | | 2,480 | 5,080 | 5,234 | 7,834 | 7,884 | 10,484 |
| | 6 | 4,170 | 7,290 | | | | | 4,019 | 7,139 | 6,669 | 9,789 |

Torques shown are for 2R-Series (ISO), 2CI-Series (Centerline Direct Mount), and 2K Series (Keystone Direct Mount)

## TR10DA - 2R1750DA

**DOUBLE ACTING TORQUE (In-lbs)**

| | AIR SUPPLY (psi) | | | | |
|---|---|---|---|---|---|
| MODEL | 40 | 60 | 80 | 100 | 120 |
| TR10DA | 30 | 45 | 60 | 75 | 90 |
| TR20DA | 79 | 118 | 158 | 197 | 237 |
| 2R40DA | 164 | 245 | 327 | 409 | 491 |
| 2R80DA | 352 | 528 | 703 | 879 | 1,055 |
| 2R130DA | 527 | 791 | 1,054 | 1,318 | 1,581 |
| 2R200DA | 716 | 1,073 | 1,431 | 1,789 | 2,147 |
| 2R300DA | 1,217 | 1,825 | 2,434 | 3,042 | 3,651 |
| 2R500DA | 1,749 | 2,624 | 3,498 | 4,373 | 5,247 |
| 2R850DA | 3,282 | 4,923 | 6,565 | 8,206 | 9,847 |
| 2R1200DA | 4,510 | 6,765 | 9,020 | 11,275 | 13,530 |
| 2R1750DA | 5,729 | 8,586 | 11,448 | 14,311 | 17,173 |

***NOTE:***
*Torque shown are for 2R Series (ISO), 2CI Series (Centerline Direct Mount, and 2K Series (Keystone Direct Mount)*

*Torques are actual. Please be sure to include appropriate safety factors for all service condition variables when sizing.*

*3-way (master slave) assemblies should use a 35% safety factor. Call factory for assistance.*

Spring Return (In-Lbs)
Spring Clockwise Direction

2R2500SR

| | Air Break | Run | Air End | Spring Break | Run | Spring End |
|---|---|---|---|---|---|---|
| 60 psi | 9,854 | 4,000 | 5,612 | 6,000 | 2,500 | 3,480 |
| 80 psi | 12,258 | 4,750 | 6,403 | 9,080 | 3,950 | 5,520 |

2R3500SR

| | Air Break | Run | Air End | Spring Break | Run | Spring End |
|---|---|---|---|---|---|---|
| 60 psi | 19,700 | 8,000 | 11,200 | 12,000 | 5,000 | 6,900 |
| 80 psi | 24,500 | 9,500 | 12,800 | 18,100 | 7,900 | 11,000 |

Double Acting (In-lbs)
Direct Acting

2R2500DA

| | 0 deg | Min | 90 deg |
|---|---|---|---|
| 60 psi | 13,334 | 6,667 | 11,610 |
| 80 psi | 17,778 | 8,890 | 15,483 |
| 100 psi | 22,223 | 11,110 | 19,350 |

2R3500DA

| | 0 deg | Min | 90 deg |
|---|---|---|---|
| 60 psi | 26,650 | 13,330 | 23,200 |
| 80 psi | 35,550 | 17,750 | 30,960 |
| 100 psi | 44,440 | 22,200 | 38,700 |

Spring Return (In-Lbs)
Spring Counter Clockwise Direction

2R2500SR

| | Air Break | Run | Air End | Spring Break | Run | Spring End |
|---|---|---|---|---|---|---|
| 60 psi | 7,522 | 4,160 | 6,000 | 6,240 | 2,330 | 2,760 |
| 80 psi | 9,500 | 5,110 | 6,432 | 7,800 | 3,600 | 4,200 |

2R3500SR

| | Air Break | Run | Air End | Spring Break | Run | Spring End |
|---|---|---|---|---|---|---|
| 60 psi | 15,000 | 8,200 | 12,000 | 12,400 | 4,600 | 5,410 |
| 80 psi | 19,000 | 10,200 | 12,800 | 15,600 | 7,200 | 8,400 |

*NOTES:*
- *2R2500 and 2R3500 are scotch yoke design*
- *Consult factory for 2R2500DAR and 2R3500DAR (reverse acting) torques.*

# DIMENSIONS
## TR10-2R1750

TRIAC

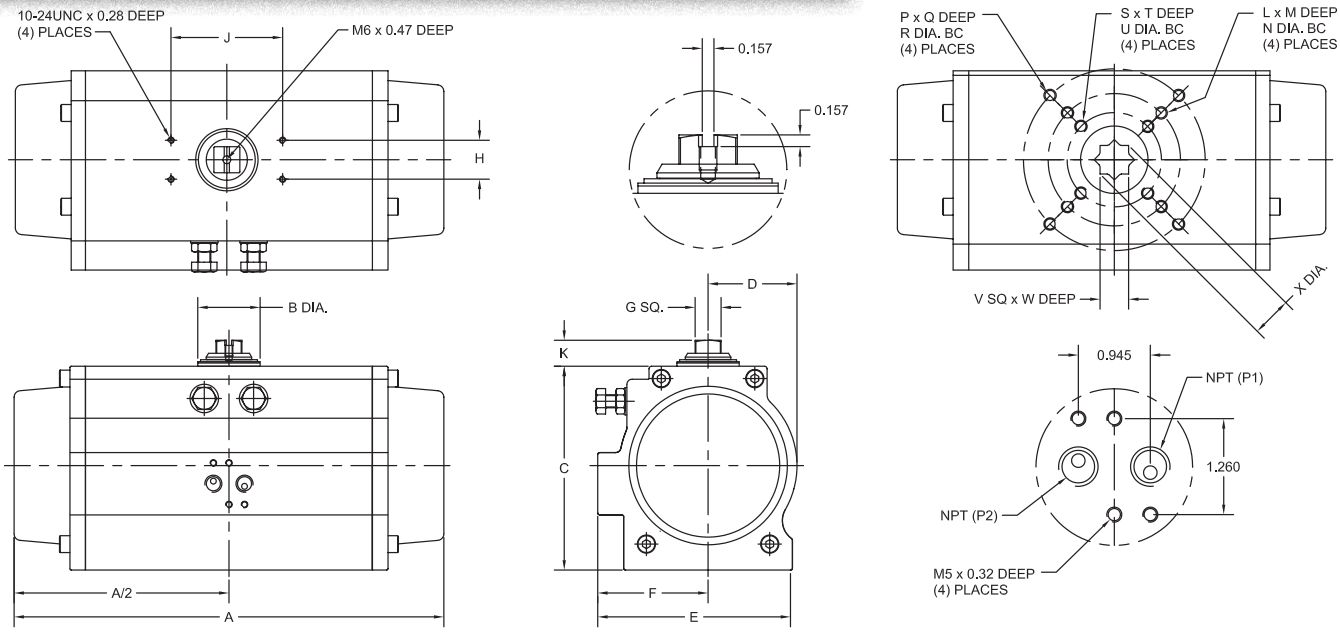


| Model | TR10 | TR20 | 2R40 | 2R80 | 2R130 | 2R200 | 2R300 | 2R500 | 2R850 | 2R1200 | 2R1750 |
|---|---|---|---|---|---|---|---|---|---|---|---|
| A | 4.57 | 5.98 / 7.60 | 7.95 | 9.29 | 10.87 | 11.46 | 13.90 | 15.16 | 20.95 | 22.68 | 24.37 |
| B dia. | 0.79 | 1.22 | 1.22 | 1.22 | 1.42 | 1.61 | 1.89 | 2.09 | 2.40 | 2.68 | 2.91 |
| C | 1.91 | 2.76 | 3.43 | 4.49 | 4.88 | 5.28 | 6.18 | 6.93 | 8.31 | 9.17 | 10.12 |
| D | 0.83 | 1.10 | 1.42 | 1.69 | 2.11 | 2.30 | 2.70 | 2.99 | 3.74 | 4.13 | 4.57 |
| E | 1.93 | 2.58 | 3.29 | 4.41 | 4.69 | 5.06 | 5.91 | 6.50 | 6.89 | 7.60 | 8.31 |
| F | 1.10 | 1.40 | 1.79 | 2.48 | 2.72 | 2.89 | 3.35 | 3.70 | 3.90 | 4.29 | 4.72 |
| NPT | 1/8″ | 1/8″ | 1/8″ | 1/4″ | 1/4″ | 1/4″ | 1/4″ | 1/4″ | 1/4″ | 1/4″ | 1/4″ |
| **ACCESSORY MOUNTING DIMENSIONS** | | | | | | | | | | | |
| G sq. | 0.354 | 0.630 | 0.630 | 0.630 | 0.630 | 0.630 | 0.787 | 0.787 | 0.787 | 1.260 | 1.260 |
| H | 0.984 | 1.181 | 1.181 | 1.181 | 1.181 | 1.181 | 1.181 | 1.181 | 1.181 | 1.181 | 1.181 |
| J | 1.969 | 3.150 | 3.150 | 3.150 | 3.150 | 3.150 | 3.150 | 5.118 | 5.118 | 5.118 | 5.118 |
| K | 0.787 | 0.787 | 0.787 | 0.787 | 0.787 | 0.787 | 0.787 | 1.181 | 1.181 | 1.181 | 1.181 |
| **VALVE MOUNTING DIMENSIONS** | | | | | | | | | | | |
| ISO 5211 | F03 | F04 | F05 / F07 | F05/F07/F10 | F07 / F10 | F07 / F10 | F07/F10/F12 | F10 / F12 | F10 / F12 | F14 | F14 |
| U dia. | 1.417 | 1.654 | 1.969 | 1.969 | N/A | N/A | 2.756 | N/A | N/A | N/A | N/A |
| N dia. | N/A | N/A | 2.756 | 2.756 | 2.756 | 2.756 | 4.016 | 4.016 | 4.016 | N/A | N/A |
| R dia. | N/A | N/A | N/A | 4.016 | 4.016 | 4.016 | 4.921 | 4.921 | 4.921 | 5.512 | 5.512 |
| S | 10-24 | 1/4″-20 | 1/4″-20 | 1/4″-20 | N/A | N/A | 5/16″-18 | N/A | N/A | N/A | N/A |
| L | N/A | N/A | 5/16″-18 | 5/16″-18 | 5/16″-18 | 5/16″-18 | 3/8″-16 | 3/8″-16 | 3/8″-16 | N/A | N/A |
| P | N/A | N/A | N/A | 3/8″-16 | 3/8″-16 | 3/8″-16 | 1/2″-13 | 1/2″-13 | 1/2″-13 | 5/8″-11 | 5/8″-11 |
| T | 0.24 | 0.31 | 0.39 | 0.39 | N/A | N/A | 0.47 | N/A | N/A | N/A | N/A |
| M | N/A | N/A | 0.47 | 0.47 | 0.47 | 0.47 | 0.63 | 0.63 | 0.63 | N/A | N/A |
| Q | N/A | N/A | N/A | 0.63 | 0.63 | 0.63 | 0.79 | 0.79 | 0.79 | 0.87 | 0.87 |
| V sq. | 0.354 | 0.433 | 0.551 | 0.748 | 0.748 | 0.748 | 0.866 | 1.063 | 1.063 | 1.417 | 1.417 |
| W | 0.39 | 0.63 | 0.67 | 0.71 | 0.71 | 0.71 | 1.02 | 1.18 | 1.18 | 1.58 | 1.58 |
| X | 0.46 | 0.58 | 0.75 | 1.02 | 1.02 | 1.02 | 1.19 | 1.47 | 1.47 | 1.97 | 1.97 |
| **WEIGHT (lbs.)** | | | | | | | | | | | |
| DA | 2.2 | 2.9 | 4.5 | 9 | 12 | 14.5 | 23 | 32 | 59 | 78 | 100 |
| SR | N/A | 3.5 | 6 | 11 | 14 | 17 | 26 | 38 | 68 | 91 | 117 |
| **VOLUME (cubic inches per 90°)** | | | | | | | | | | | |
| CW | 3 | 8 | 16.5 | 34 | 52 | 67 | 116 | 183 | 334 | 505 | 703 |
| CCW | 3 | 6 | 14 | 23 | 36 | 49 | 100 | 137 | 259 | 357 | 439 |
| **CYCLE TIMES (seconds per 90°)** | | | | | | | | | | | |
| DA | 0.3 | 0.5 | 0.6 | 1 | 1.2 | 1.5 | 2 | 2.5 | 3 | 4 | 5 |
| SR | N/A | 0.5 | 0.6 | 1 | 1.2 | 1.5 | 2 | 2.5 | 3 | 4 | 5 |

TR10 & TR20 have travel stops located in the End Caps for travel adjustment in one direction. 2R40 & 2R80 have travel stops on the opposite side as shown.

**Direct Acting:**
Pressure at port P1 will result in a clockwise rotation
Pressure at port P2 will result in a counter clockwise rotation

**Reverse Acting:**
Pressure at port P1 will result in a counter clockwise rotation
Pressure at port P2 will result in a clockwise rotation

$$\text{Air Consumption (scf per 90 Deg)} = \frac{\text{Volume}}{1{,}728} \times \frac{\text{Supply Pressure} + 14.7}{14.7}$$

**NOTES:** Accessory mounting holes are not intended for Manual Gear Overrides or Stop Blocks. Cycle times are under no load conditions. Air line size, air capacity, and valve torque characteristics affect these cycle times. Faster or slower cycle times can be accomplished using special control components.

# DIMENSIONS
# 2R2500-2R3500

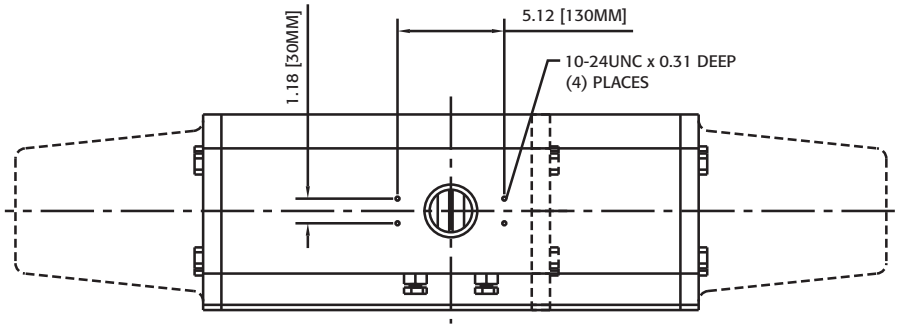


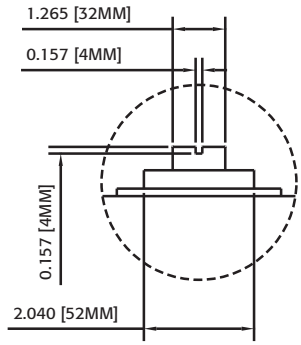


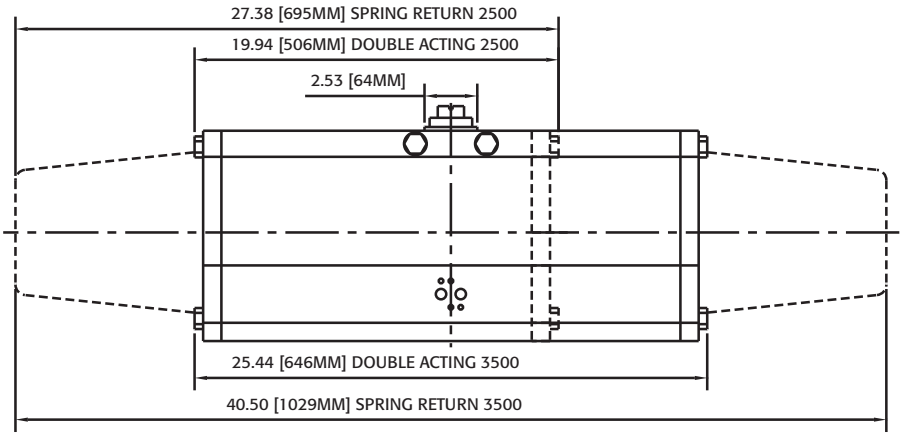


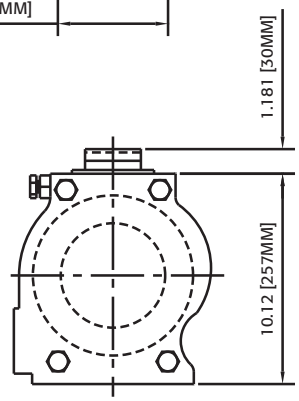


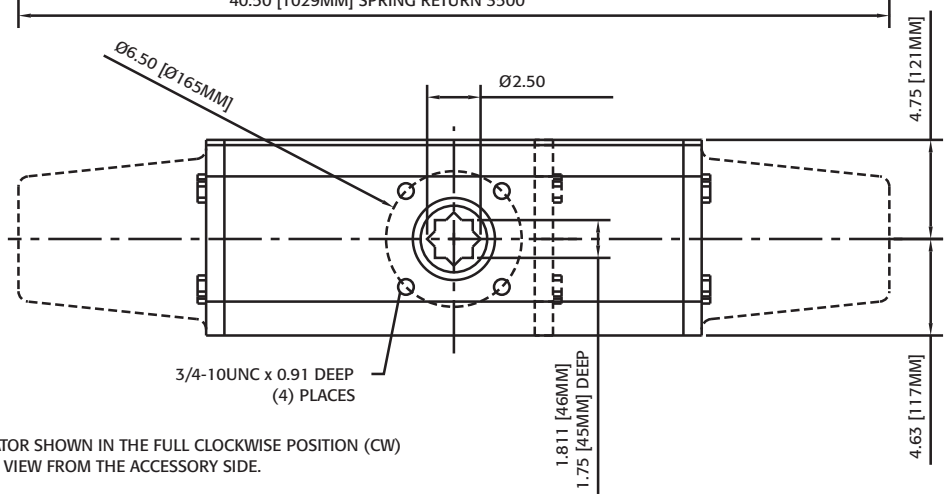


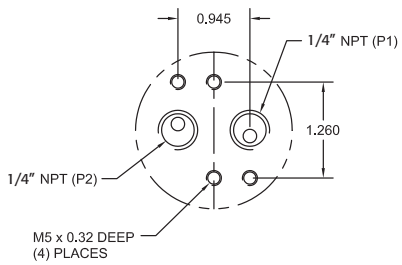


ACTUATOR SHOWN IN THE FULL CLOCKWISE POSITION (CW)
WHEN VIEW FROM THE ACCESSORY SIDE.

| | WEIGHT (POUNDS) | | VOLUME (CU. IN. PER 90 DEG) | | CYCLE TIMES (SEC. PER 90 DEG) | |
|---|---|---|---|---|---|---|
| MODEL | DA | SR | CW | CCW | CW | CCW |
| **2R2500** | 98 | 137 | 525 | 310 | 5 | 5 |
| **2R3500** | 125 | 195 | 650 | 585 | 9 | 9 |

$$\textbf{Air Consumption (scf per 90 Deg)} = \frac{\textbf{Volume}}{\textbf{1,728}} \times \frac{\textbf{Supply Pressure + 14.7}}{\textbf{14.7}}$$

**NOTES:** Accessory mounting holes are not intended for Manual Gear Overrides or Stop Blocks.
Cycle times are under no load conditions. Air line size, air capacity, and valve torque characteristics affect these cycle times. Faster or slower cycle times can be accomplished using special control components.

# DIRECT MOUNT FOR BUTTERFLY VALVES

TRIAC

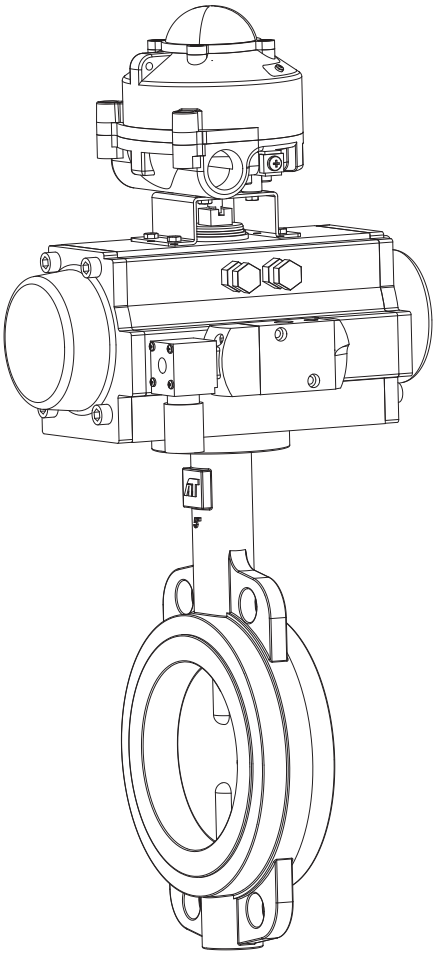

- Available for many of the most popular resilient seated butterfly valves
- Call for details and availability
- Usually requires no additional hardware
- Lower profile packages
- Wide base accommodates pattern without transition plate

TRIAC actuators feature a wide base to enable direct mounting to many butterfly valves without transition plates. Contact factory for compatibility with your particular butterfly valve or see A-T Controls' complete line of resilient and high performance butterfly valves.

## Dimensions – 2K Series

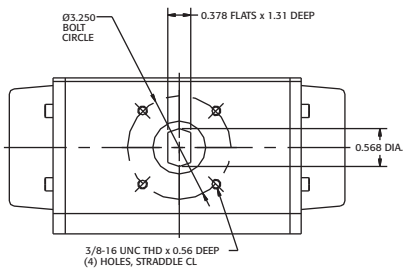


**2K40**

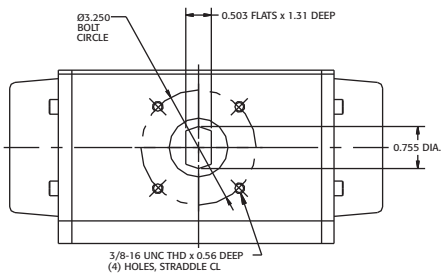


**2K80 - 2K200**

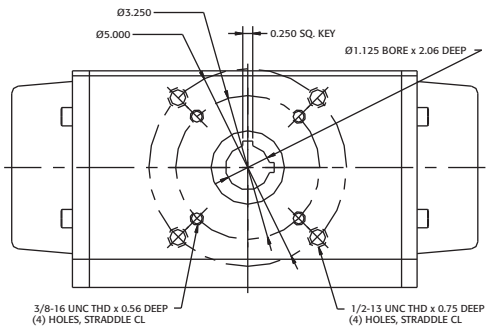


**2K300 - 2K1200**

Note: 2K850 and 2K1200 have only 5" bolt circle

## Adapter Dimensions for 2K Series

Refer to valve dimensions for actual sizing

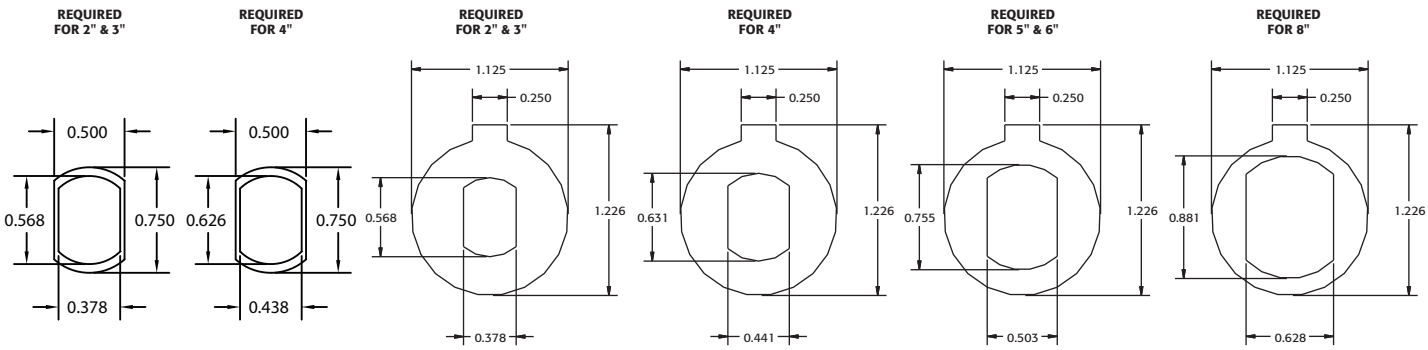


**PART #TKA-010** **PART #TKA-012** **PART #TKA-020** **PART #TKA-030** **PART #TKA-040** **PART #TKA-050**

Other inserts are available on request.

# DIRECT MOUNT ACTUATORS FOR CENTERLINE BUTTERFLY VALVES

TRIAC

Note:
» The 2CI Series actuators have five springs per side.
» The final number(s) in the 2CI model numbers refers to the size of the Butterfly Valve body for mounting.

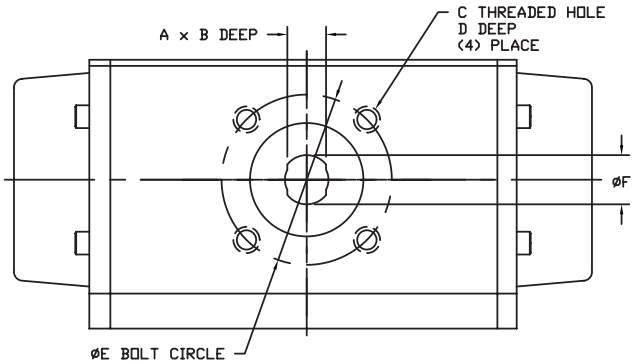


| DOUBLE ACTING MODEL | SPRING RETURN MODEL | A | B | C | D | E | F |
|---|---|---|---|---|---|---|---|
| 2CI40DA/2-3 | 2CI40SR/2-3 | 0.394 | 1.31 | 5/16-18 | 0.47 | 2.756 | 0.50 |
| 2CI80DA/2-3 | 2CI80SR/2-3 | 0.394 | 1.31 | 5/16-18 | 0.47 | 2.756 | 0.50 |
| 2CI80DA/4 | 2CI80SR/4 | 0.472 | 1.31 | 5/16-18 | 0.47 | 2.756 | 0.63 |
| 2CI80DA/5-6 | 2CI80SR/5-6 | 0.551 | 1.31 | 5/16-18 | 0.47 | 2.756 | 0.75 |
| 2CI130DA/2-6 | 2CI130SR/2-6 | 0.394 | 1.31 | 5/16-18 | 0.47 | 2.756 | 0.50 |
| 2CI130DA/4 | 2CI130SR/4 | 0.472 | 1.31 | 5/16-18 | 0.47 | 2.756 | 0.63 |
| 2CI130DA/5-6 | 2CI130SR/5-6 | 0.551 | 1.31 | 5/16-18 | 0.47 | 2.756 | 0.75 |
| 2CI200DA/4 | 2CI200SR/4 | 0.472 | 1.31 | 5/16-18 | 0.47 | 2.756 | 0.63 |
| 2CI200DA/5-6 | 2CI200SR/5-6 | 0.551 | 1.31 | 5/16-18 | 0.47 | 2.756 | 0.75 |
| 2CI300DA/5-6 | 2CI300SR/5-6 | 0.551 | 1.31 | 5/16-18 | 0.47 | 2.756 | 0.75 |
| 2CI300DA/8 | 2CI300SR/8 | 0.669 | 1.81 | 3/8-16 | 0.63 | 4.016 | 0.88 |
| 2CI300DA/10 | 2CI300SR/10 | 0.866 | 1.81 | 3/8-16 | 0.63 | 4.016 | 1.13 |
| 2CI500DA/8 | 2CI500SR/8 | 0.669 | 1.81 | 3/8-16 | 0.63 | 4.016 | 0.88 |
| 2CI500DA/10 | 2CI500SR/10 | 0.866 | 1.81 | 3/8-16 | 0.63 | 4.016 | 1.13 |
| 2CI500DA/12-14 | 2CI500SR/12-14 | 0.945 | 1.81 | 3/8-16 | 0.63 | 4.016 | 1.25 |
| 2CI850DA/8 | 2CI850SR/8 | 0.669 | 1.81 | 3/8-16 | 0.63 | 4.016 | 0.88 |
| 2CI850DA/10 | 2CI850SR/10 | 0.866 | 1.81 | 3/8-16 | 0.63 | 4.016 | 1.13 |
| 2CI850DA/12-14 | 2CI850SR/12-14 | 0.945 | 1.81 | 3/8-16 | 0.63 | 4.016 | 1.25 |
| 2CI1200DA/10 | 2CI1200SR/10 | 0.866 | 1.81 | 3/8-16 | 0.63 | 4.016 | 1.13 |
| 2CI1200DA/12-14 | 2CI1200SR/12-14 | 0.945 | 1.81 | 3/8-16 | 0.63 | 4.016 | 1.25 |

## Inserts for use with 2R Series Actuators

(Refer to V sq. dimension on page 6)

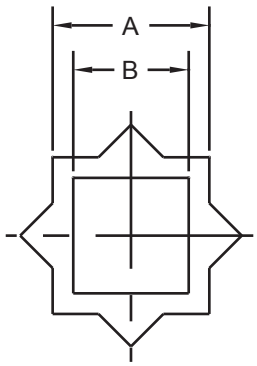


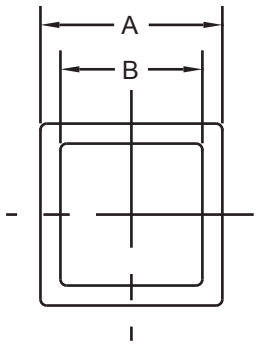


| STAR INSERTS | A | B |
|---|---|---|
| ATD11T09 | 0.433 | 0.354 |
| ATD14T09 | 0.551 | 0.354 |
| ATD14T11 | 0.551 | 0.433 |
| ATD17T11 | 0.669 | 0.433 |
| ATD19T09 | 0.748 | 0.354 |
| ATD19T11 | 0.748 | 0.433 |
| ATD19T14 | 0.748 | 0.551 |
| ATD19T17 | 0.748 | 0.669 |
| ATD22T14 | 0.866 | 0.551 |
| ATD27T17 | 1.063 | 0.669 |
| ATD27T22 | 1.063 | 0.866 |

| SQUARE INSERTS | A | B |
|---|---|---|
| C13706 (14mm-9mm) | 0.551 | 0.354 |
| C14352 (17mm-14mm) | 0.669 | 0.551 |
| C14700 (22mm-11mm) | 0.866 | 0.433 |
| C11251 (22mm-17mm) | 0.866 | 0.669 |
| ATE22T19 | 0.866 | 0.748 |
| C17394 (27mm-11mm) | 1.063 | 0.433 |
| C17012 (27mm-14mm) | 1.063 | 0.551 |
| C15186 (27mm-19mm) | 1.063 | 0.748 |
| C17291 (27mm-22mm) | 1.063 | 0.866 |
| C17011 (36mm-17mm) | 1.417 | 0.669 |
| C17013 (36mm-19mm) | 1.417 | 0.748 |
| C13116 (36mm-27mm) | 1.417 | 1.063 |

## Solenoid Valves

- Direct mount TVC series
- Nipple mount available
- Weatherproof/explosion proof construction
- Intrinsically safe coil available
- Various voltages - AC or DC
- Quick exhaust modification
- 2 or 3 position control
- Exhaust speed controls

***TVCS-X411-4N***
***Direct Mount Solenoids***
***All Accessory Options Available***

## APL Limit Switches

- Aluminum or Stainless Steel housing
- Weatherproof/explosion proof construction
- Dome indicator
- Easy-Set cams
- Captive bolts
- Many switch options
- AS-I systems
- Can be mounted on manual valves

***APL-910N***
*Stainless Steel*
*Type 4X, IP 67*

***APL-310N***
*CSA Approved,*
*Type 4X*

***APL-510N***
*CSA Approved*
*Class I, Div 1 & 2, Groups B, C, D*

***APL-210N***
*CSA Approved, Type 4X*

*See brochure for details & options*

## Other Pneumatic Actuators

*See stainless steel actuator brochure for detailed information.*

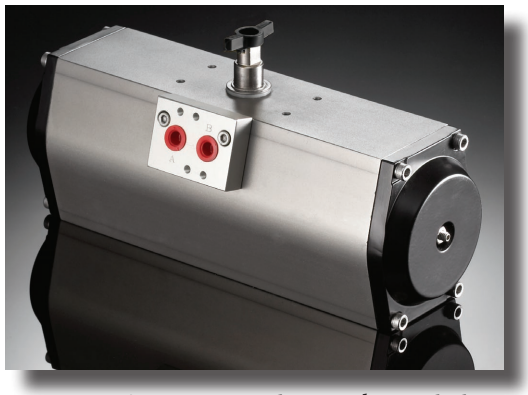

*See 180° Pneumatic Rack & Pinion brochure for details.*

## Positioners

***PPR, EPR & SS "Smart" Series***

## Declutchable Gear Overrides

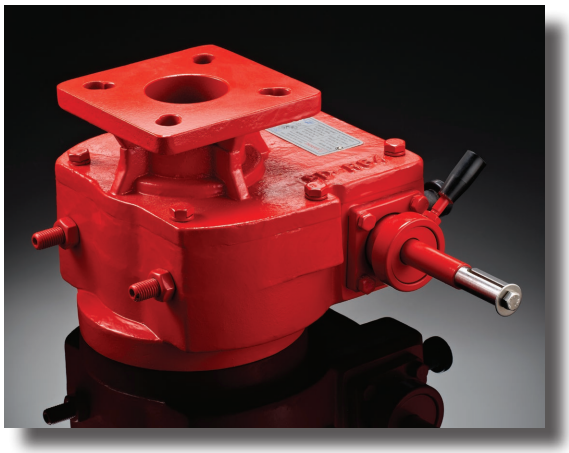

***2R, 2C, and 2K DGO SERIES***

## Other Accessories and Controls

- Lock-up valves
- Filter regulators
- Special tubing/fittings
- Lockout/tagout hardware
- Flow controls
- Speed controls
- Custom assemblies
- Dribble control
- Specials
- Complete mounting and assembly service

## Sample Specification

Actuators shall be of rugged pneumatic Rack & Pinion Design. Actuator body should be hard anodized to promote long cycle life and corrosion resistance. The actuator body should incorporate a heavy duty, ISO 5211 valve mounting pad with multiple ISO FO bolt circles for ease of mounting. Actuator internals should include dual aluminum pistons for a balanced torque load and a one-piece plated blow-out proof pinion for operator safety. Actuator drive pinions should incorporate significant body housing bearings with heavy duty O-Ring seals to promote high cycle life. The unit should have a dual travel stop feature, with a minimum of 5° of stroke adjustment on both ends of travel, to accommodate numerous valve and damper designs. All actuator fasteners and hardware should be stainless steel for corrosion resistance. The rack & pinion actuator line should be offered in a broad range of torque outputs. The actuator of choice should be A-T Controls (TRIAC®) TR/2R Series Rack & Pinions.

## TRIAC Model Number Matrix

**2** Triac Rack & Pinion Actuator with double travel stops
**T** Triac Rack & Pinion Actuator with single travel stop (TR10DA, TR20DA, TR20SA only)

- **R** ISO / DIN mounting configuration
- **CI** Direct mount to Centerline BFV**
- **K** Direct mount to Keystone / ABZ / Ultraflow BFV
- **N** Direct mount to Nibco BFV (special order: CF)
- **D** Direct mount to Demco BFV (special order: CF)

  Note: Others available, call for details

  - **0000** Actuator size (10, 20, 40, 80, 130, 200, 300, 500, 850, 1200, 1750, 2500, 3500)
    - **DA** Double acting configuration
    - **DAR** Double acting (reverse acting) configuration
    - **SR** Spring return fail clockwise configuration
    - **SO** Spring return fail counter-clockwise configuration
      - **Blank** Standard Buna seals (-5˚F to 175˚F)
      - **V** Viton® seals (0˚F to 300˚F)
      - **LT** Low temperature Silicone seals (-45°F to 175°F)
        - **Blank** 5 springs per side (SR & SO only) (See pg 9 for 2CI model numbers)
        - **0** Specify number of springs per side (1-6) (SR & SO only) (See pg 9 for 2CI model numbers)
          - **E** Extra long travel stops

**Example: 2R80SRE** (TRIAC Model 80 Rack & Pinion Actuator with Travel Stop in both directions, Spring Return fail clockwise, with Extra long travel stops)

**Note: When ordering a 2CI actuator, please specify the valve size per the 2CI model numbers on page 9.

Viton® is a registered trademark of E.I. DuPont de Nemours.

## Dual Travel Stop Adjustment

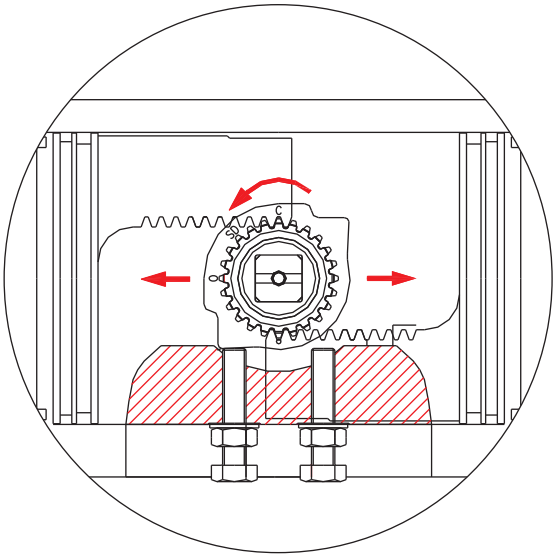

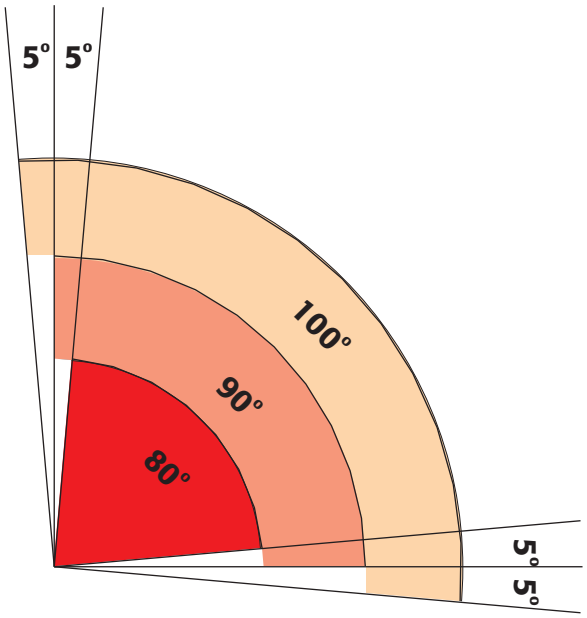


Triac 2R Series features a splined stop collar that provides travel stop adjustments in both the clockwise and counter-clockwise directions. The splined collar ensures minimal hysteresis and repeatable stop positions.

## Support

Engineering assistance and 2D & 3D model drawings available

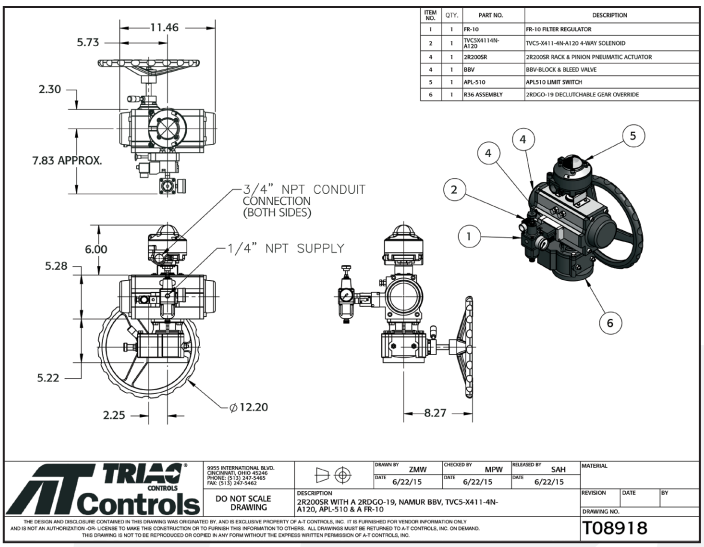


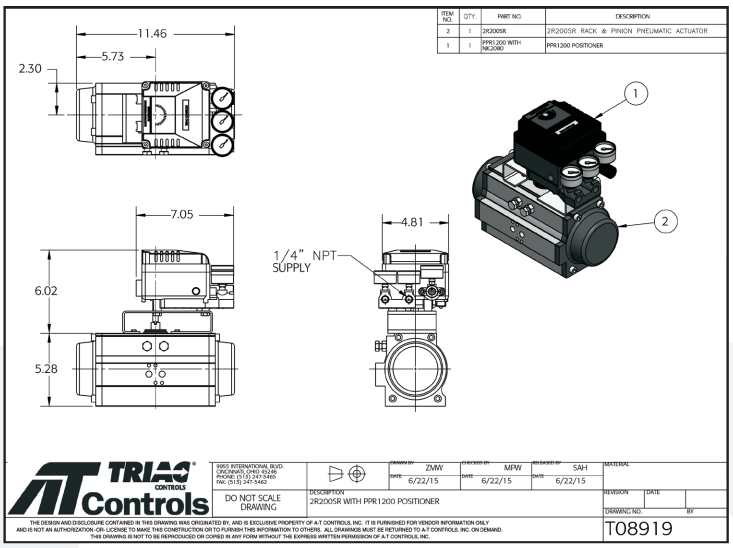

# EXPLODED VIEW AND BILL OF MATERIAL

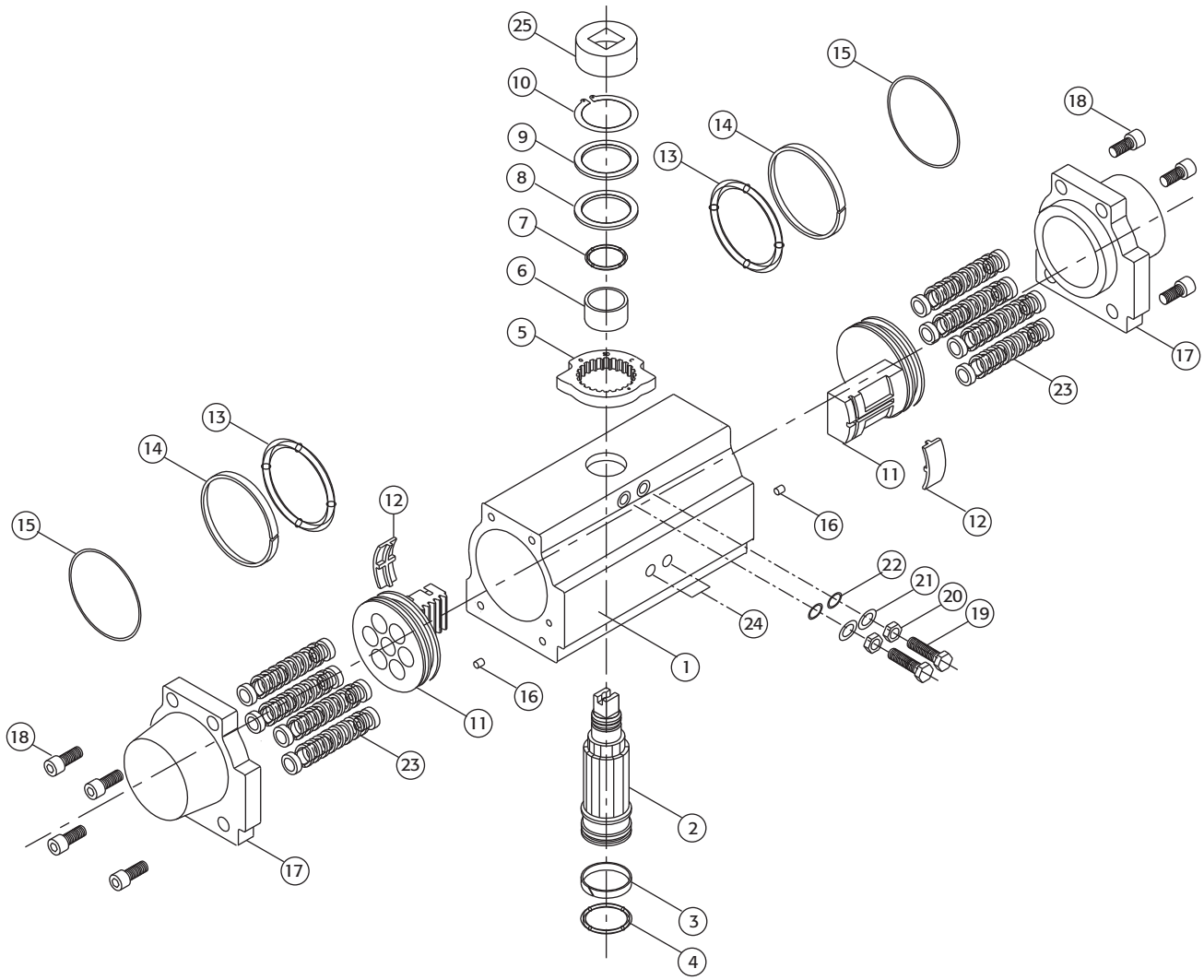


| No. | Description | Qty. | Material | Remarks |
|---|---|---|---|---|
| 1 | Cylinder Body | 1 | Aluminum | Hard Anodized |
| 2 | Pinion | 1 | Steel | Zinc Plated |
| 3 | Bottom Pinion Bushing ①② | 1 | Nylon | |
| 4 | Bottom Pinion O-ring ①② | 1 | Nitrile Buna | |
| 5 | Travel Stop Cam | 1 | SCM21 | Phosphate Coated |
| 6 | Top Pinion Bushing ①② | 1 | Nylon | |
| 7 | Top Pinion O-ring ①②③ | 1 | Nitrile Buna | |
| 8 | Pinion Teflon Washer ①② | 1 | RTFE | |
| 9 | Pinion SST Washer ①② | 1 | 304 Stainless Steel | |
| 10 | Snap Ring ①② | 1 | Steel | Zinc Plated |
| 11 | Piston | 2 | Die Cast Aluminum | Dichromate Dipped |
| 12 | Guide Plate ①② | 2 | Nylon | |
| 13 | Piston O-ring ①②③ | 2 | Nitrile Buna | |
| 14 | Piston Guide Band ①② | 2 | PTFE | |
| 15 | End Cap O-ring ①②③ | 2 | Nitrile Buna | |
| 16 | Hole Sealant | 2 | Nitrile Buna | |
| 17 | End Cap | 2 | Die Cast Aluminum | Epoxy Coated |
| 18 | End Cap Bolt | 2 | 304 Stainless Steel | |
| 19 | Travel Stop Bolt | 2 | 304 Stainless Steel | |
| 20 | Travel Stop Nut | 2 | 304 Stainless Steel | |
| 21 | Travel Stop Washer | 2 | 304 Stainless Steel | |
| 22 | Travel Stop O-ring ①②③ | 2 | Nitrile Buna | |
| 23 | Spring Cartridge | 12 | Spring Steel | Epoxy Coated |
| 24 | Dust Plug | 2 | Polyethylene | |
| 25 | Position Indicator | 1 | Polyethylene | |

① Recommended spare parts
② Parts included in a repair kit
③ Parts included in a seal kit

| Repair Kit | | |
|---|---|---|
| Nitrile Buna | 2RKB(Actuator Size) | -5°F ~ +175°F |
| Viton | 2RKV(Actuator Size) | 0°F ~ +300°F |
| Low Temp Silicone | 2RKLT(Actuator Size) | -45°F ~ +175°F |

Example: 2RKB0130 = Nitrile Buna Repair Kit for 2R130

| Seal Kit | | |
|---|---|---|
| Nitrile Buna | 2BOK(Actuator Size) | -5°F ~ +175°F |
| Viton | 2VOK(Actuator Size) | 0°F ~ +300°F |
| Low Temp Silicone | 2LTOK(Actuator Size) | -45°F ~ +175°F |

Example: 2VOK0080 = Viton Seal Kit for 2R80

# ADDITIONAL A-T CONTROLS PRODUCTS

## Electric Actuators

- Torques to 80,000 in-lbs
- Weatherproof enclosure
- ISO 5211 mounting kits
- On-off or modulating
- CSA approved
- Fail-Safe Electrics

***Custom Mounting and Assembly Service***

## Heavy Duty Actuators

- Double Acting
- Spring Return
- Features stabilizer bar for longer cycle life
- Torques to 1,600,000 in-lbs
- Easy accessory mounting
- Symmetric & Canted Yoke

## Manual Gear Operators & Overrides

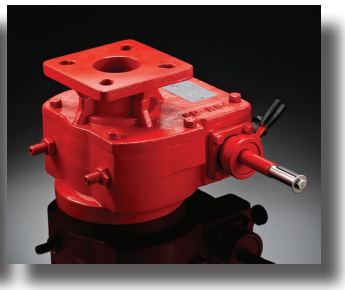

- Quarter turn and multi-turn
- Torques to 410,000 in-lbs
- Declutchable gear overrides
- ISO 5211 and other mounting
- Custom mounting available

## Automated Valve Assemblies

- Pneumatic or Electric
- Pre-engineered assemblies
- Pre-sized and pre-priced
- Double Acting or Spring Return
- Multi-port valves
- Various End Connection
- Options
- 150#, 300# and 600# flanged
- Sanitary ends
- Firesafe valves and more
- Tank bottom valves
- Segmented Control Valves
- Butterfly Valve packages
- FM Approved Assemblies

***Complete Valve Automation***

***See our website for IOM's & 3D models!***

TRIAC

A-T Controls, Inc.

9955 International Blvd.
Cincinnati, Ohio 45246
PH (513) 247-5465
FAX (513) 247-5462
www.atcontrols.com

RP-20200731
Copyright 2013 A-T Controls, Inc.
LIT0004